DraMS Testing (CCDH Layout)

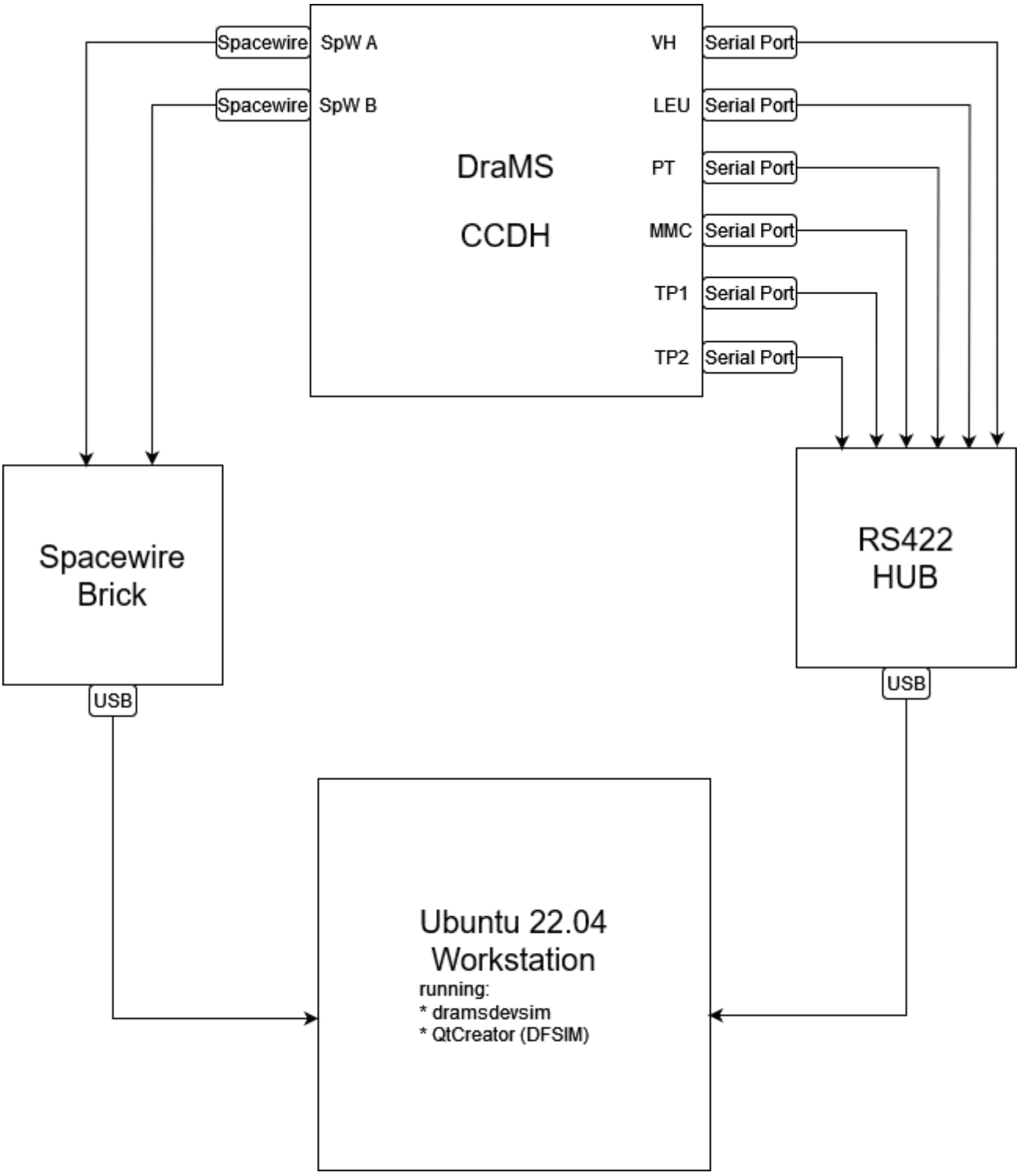

Revision #3
Created 1 December 2023 21:44:32 by Michael Burkhart
Updated 1 December 2023 22:45:40 by Michael Burkhart